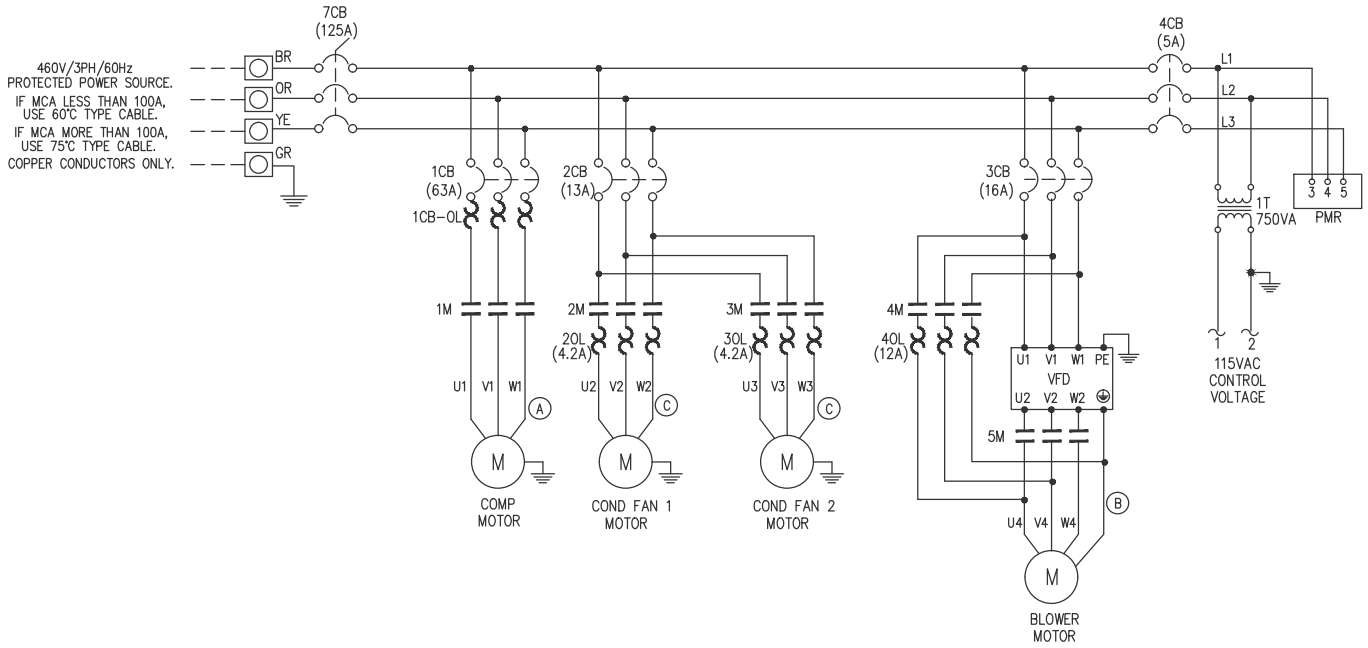

ELECTRICAL DATA

MOTOR	HP/kW	RLA	LRA
BLOWER	10HP	11.6A	81A
COMP	40HP	48A	310A
C/FAN 1&2	2.5HP	4.2A	25A
UNIT DATA			
FLA	68A		
MCA	80A		
MFS	125A		

SET POINTS

1HP	560#/MANUAL RESET
2HP	350#/CUT IN/295# CUT-OUT
3HP	400#/CUT IN/345# CUT-OUT
1LP	65#/MANUAL RESET
1TR. 2TR	60 SEC
1CB-OL	60A
20L, 30L	4.2A
40L	12A
IR33 SETTINGS	
IR33-1 (CLG)	70F (BY RA PROBE)
	55F (BY SA PROBE)

LEGEND

AFS – AIR FLOW SWITCH
CB – CIRCUIT BREAKER
CO – CONVENIENT OUTLET
CR – CONTROL RELAY
ES – EMERGENCY SWITCH
FLA – FULL LOAD AMPS
FU – FUSE
GFCI – GROUND FAULT CIRCUIT INTERUPTOR
Hp – HORSE POWER
HP – HIGH PRESSURE SWITCH
HTL – HIGH TEMPERATURE LIMIT SWITCH
ITS – INTERNAL TERMAL SENSOR
J – JUMPER
KW – KILOWATT
LLS – LIQUID LINE SOLENOID
LRA – LOCKED ROTOR AMPS
LP – LOW PRESSURE SWITCH
M – CONTACTOR
MP – MOTOR PROTECTOR
MCA – MINIMUM CIRCUIT AMPS
MCCB – MOULDED CASE CIRCUIT BREAKER
MFS – MAXIMUM FUSE SIZE
OL – OVERLOAD PROTECTOR
PL – PILOT LIGHT
PMR – PHASE MONITOR RELAY
POT – POTENTIOMETER
RLA – RATED LOAD AMPS
STG – STAGE
SW – SWITCH
TB – TERMINAL BLOCK
TR – TIMER RELAY
T – TRANSFORMER
TS – TEMP. SENSOR
R – RED
G – GREEN
A – AMBER
VFD – VARIABLE FREQ. DRIVE
* – FIELD SUPPLY
▲ – MANUAL RESET
——— – FACTORY WIRING
— — – FIELD WIRING
(n) – SEE NOTE 'n'
(O) – CAM-LOCK

CABLE SIZE

CONTROL – 14AWG
(A) – 6AWG, BLACK
(B) – 10AWG, BLACK
(C) – 12AWG, BLACK

REV.	DESCRIPTION	DATE	REV. BY	CHK'D. BY	APP'D BY
02.	ADD 20L & 30L	27.11.17	JUN		
01.	REFER PAGE 2 & 4 OF 4	02.11.17	JUN	HANIS	LOW KC

THIS DOCUMENT IS THE PROPERTY OF SMARTECH AND SHOULD NOT BE DISCLOSED OR USED WITHOUT THE EXPRESSED CONSENT OF COMPANY

DRAWN BY:	JUN	DATE:	12.10.2017
CHECKED BY:	HANIS	DATE:	17.10.2017
APPROVED BY:	LOW KC	DATE:	20.10.2017

PROJECT: 40 Ton rental AC unit

MODEL: SACP 40A-HS

UNIT NO:

SMART FAMILY OF COOLING PRODUCTS
www.SmartCooling Products.com 281-540-2805

TITLE: SCHEMATIC WIRING DIAGRAM

DRAWING NO: S210840218

F.O NO:

SHEET 1

SMT/MFG/ENG/FM/02(REV1)

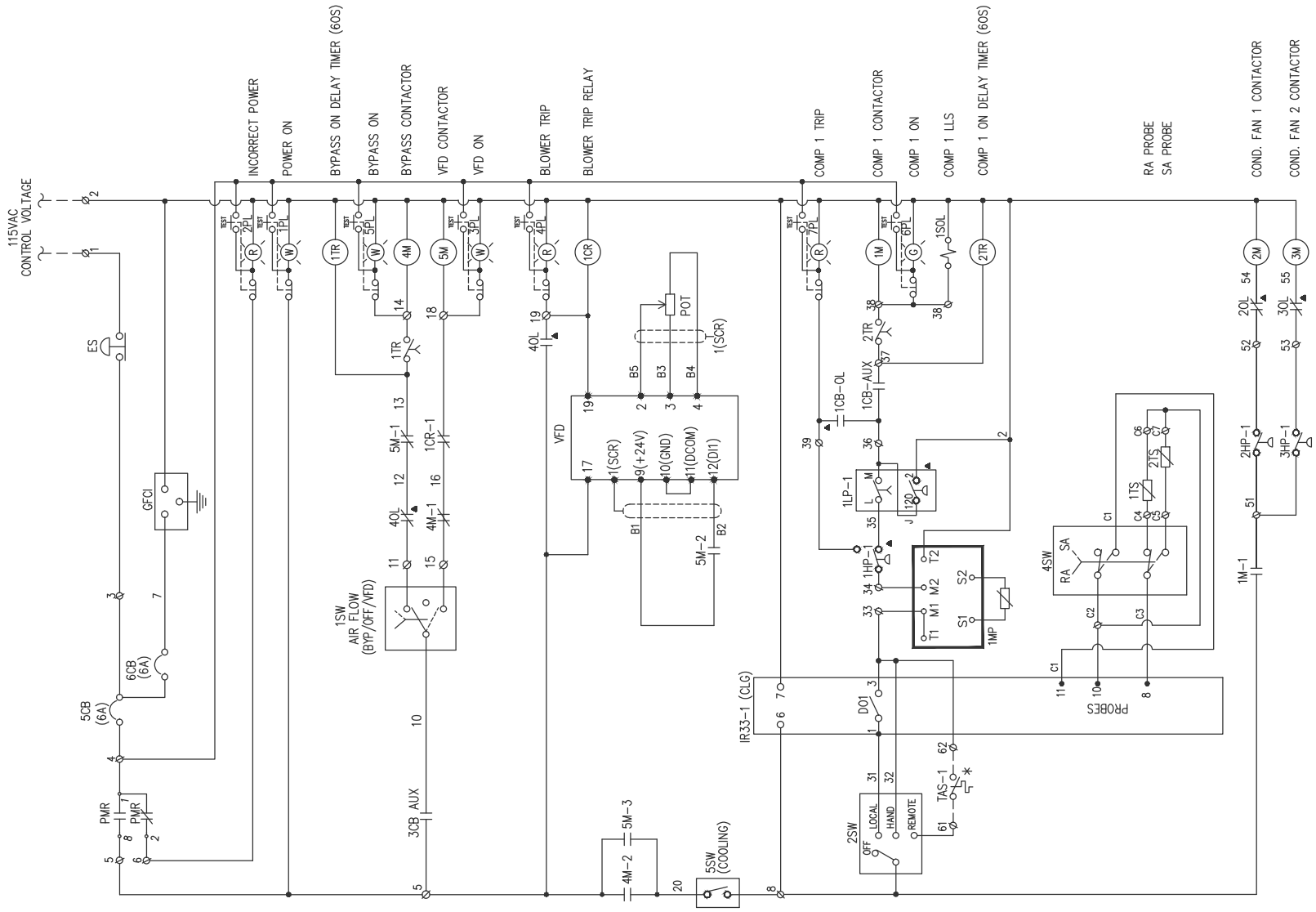

REV.	DESCRIPTION	DATE	REV. BY	CHK'D. BY	APP'D BY
02.	ADD 2OL & 3OL	27.11.17	JUN		
01.	INSTALL PUSH TO TEST LIGHT	02.11.17	JUN	HANIS	LOW KC

THIS DOCUMENT IS THE PROPERTY OF SMARTECH AND SHOULD NOT BE DISCLOSED OR USED WITHOUT THE EXPRESSED CONSENT OF COMPANY

DRAWN BY: JUN	DATE: 12.10.2017	
CHECKED BY: HANIS	DATE: 17.10.2017	
APPROVED BY: LOW KC	DATE: 20.10.2017	

PROJECT: 40 Ton rental AC unit

MODEL: SACP 40A-HS

UNIT NO:

SMART FAMILY OF COOLING PRODUCTS
www.SmartCooling Products.com 281-540-2805

TITLE: SCHEMATIC WIRING DIAGRAM

DRAWING NO: S210840218

F.O NO:

SHEET 2

SMT/MFG/ENG/FM/02(REV1)