SMART FAMILY OF COOLING PRODUCTS

INSTALLATION, OPERATION, & MAINTENANCE MANUAL

SACP28A-HS

TABLE OF CONTENTS

PAGE

GENERAL INFORMATION

IMPORTANT NOTICE 2

PREPARATION

INITIAL CHECK 3
TRANSPORTATION 4
UNIT DIMENSIONAL DATA 5
PHYSICAL SPECIFICATIONS 6

INSTALLATION

ELECTRICAL WIRING 7
DUCT CONNECTIONS 7
INSTALLATION FINAL CHECK 7
TEST RUNNING 8

OPERATION

EQUIPMENT FEATURES 9
SYSTEM CONTROL / CAPACITY CONTROL 9
TABLE OF ALARMS 12
SA33 SETTINGS 13
VFD SETTINGS 14
OPERATOR PANEL OPERATION PROCEDURE 15

MAINTENANCE

MAINTENANCE SCHEDULE 16
LEAK TEST 17
VACUUM TEST & DEHYDRATION 17
REPLACEMENTS of DRIERS or SIGHT GLASS 17
CHARGING 18
LUBRICATION 18
REFRIGERANT PIPING 19
WIRING DIAGRAM 21
CONTROL PANEL LAYOUT 23
ELECTRICAL LEGEND 24
SAMPLE LOG SHEET 25
TROUBLESHOOTING TABLE 26

IMPORTANT NOTICE

- SMARTech pursues a policy of continuing improvement in design and performance of products. The right therefore is reserved to vary specifications without notice.
- SMARTech can not anticipate every possible circumstance that might involve a potential hazard.
- No part of this manual may be reproduced without written permission.
- Signal words (DANGER, WARNING and CAUTION) are used to identify severity of hazard.

⚠ DANGER

Immediate hazards which WILL result in severe personal injury or death.

⚠ WARNING

Hazards or unsafe practices which COULD result in severe personal injury or death.

⚠ CAUTION

Hazards or unsafe practices which COULD result in minor personal injury or product or property damage.

NOTE

Useful information for operation and /or maintenance:

- If you have any questions, please contact your contractor or dealer of SMARTech.
- This manual gives a common description and information for this air-cooled package which you operate as well as for other models.
- This manual should be considered as a permanent part of the air-cooled chiller equipment and should remain with the air-cooled chiller equipment.
- It is assumed that the reader of this manual and those who install, operate and maintain the equipment have a basic understanding of the principles of air conditioning, refrigeration and electrical controls.

PREPARATION

Initial Check

Required Materials - Measure and check architectural information regarding installation location.

Installation Location - Confirm the final installation location is provided with convenient piping and wiring work. Strong water runoff should be avoided.

Installation Space - Check for obstacles which hamper maintenance work and unit operation in the space specified in "space requirements and clearance". When the unit is installed at the location where the unit is encircled with walls and obstruction of free air circulation is suspected, consultation with SMARTech regarding the operation space is recommended.

Foundation - Check to ensure the foundation is flat, level, and sufficiently strong, taking into account the maximum foundation gradient and the unit weight balance. Confirm elevation provision for unit on a solid base with an iron frame or concrete curbs for either rooftop or on-the-ground installation, provide a gravel or concrete space around the condenser air intake, in order to avoid air flow obstruction due to grass or other vegetation.

Unit - Check to insure that the unit has been transported without damage. File a damage claim with the transportation companies if mishandling due to transportation company negligence is suspected.

Transportation - Secure the route to the final installation location by confirming the packing dimensions. (Refer "Unit Dimensional Data")

Placing the Unit

⚠ DANGER

- **If leakage is detected, stop the unit and contact the installer or a service shop. Don't use a naked fire near the refrigerant gas. If a naked fire is utilized near the refrigerant gas, refrigerant gas is turned into harmful phosgene compound.**

⚠ WARNING

- **The unit is operated with refrigerant R410A, which is non flammable and non poisonous. However, refrigerant itself is heavier than the atmosphere so that a floor is covered with refrigerant gas if refrigerant is leaked. Therefore, maintain good ventilation to avoid choke during servicing.**

⚠ CAUTION

- **Check to ensure that valves are correctly opened. If not opened, serious damage will occur to the compressor due to an abnormally high pressure.**

Tools and Instruments - pincers, Wrenches, Facilities to Transport and Place the Unit.

Transportation - Transport the unit as close to the final installation location as practice before unpacking is accomplished. Provide adequate facilities to place the unit on the foundation, with sufficient consideration given to those individuals performing the installation.

Unpacking - Follow the instructions marked on the packing.

PREPARATION

Transportation

1) Rigging

Hook wire cables with rigging hook (refer to figure below) to prevent the unit panels from damage due to cable scratches. The unit should remain in an upright position even during rigging. The wire cable to rig the unit shall be 3(three) times stronger than unit weight. Check to ensure that the rigging bolts are tightly fixed to the unit. The rigging angle shall be greater than 60^0. The weight of the units indicated on unit “physical specification”.

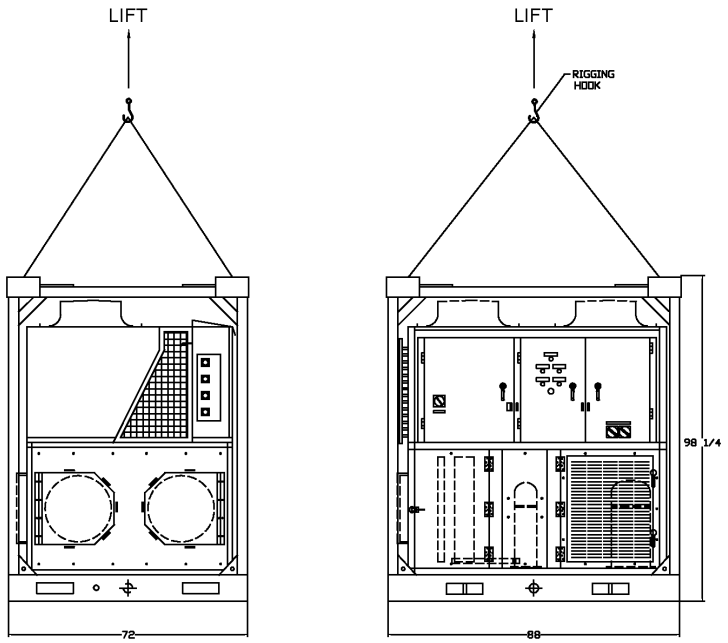

CAUTION

- **Do not attach a chain hoist sling to the piping or pipe fittings!**

2) Transportation by Forklift

Unit mounted on skid may be moved with a forklift, but care must be taken not to cause damage by the forks. The skid should not be removed until the unit is at its final location.

3) Space Requirements and Clearance

The dimensional data and clearances that follow are useful for determining space requirements. The unit should be placed with the necessary clearance for proper servicing. Failure to allow such clearance may cause damage and improper operation.

The provision for supply of ambient air to the condenser, and sufficient hot air rejection from the condenser area is imperative to ensure unit performance and reliable operation. Failure to comply with the minimum space clearances will result in higher condensing temperatures, poor operation, high power consumption and possible equipment failure. Unit must not be located in the vicinity of steam, hot air or fume exhausts.

Mount the unit away from noise sensitive spaces and provide adequate support to avoid vibration and noise transmission into occupied spaced. If possible mount unit over corridors, utility areas, rest rooms or other auxiliary areas where sound levels are not an important factor. Consult sound and structural experts on critical installations.

Unit Dimensional Data [SACP 28A-HS]

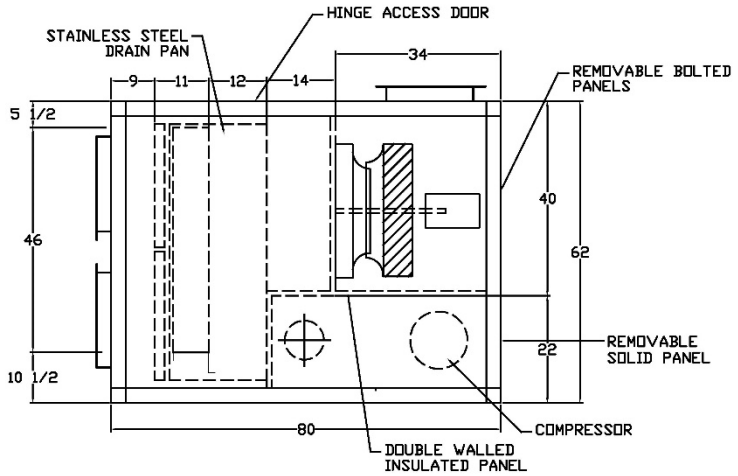

PLAN VIEW OF EVAP. BLOWER SECTION ONLY

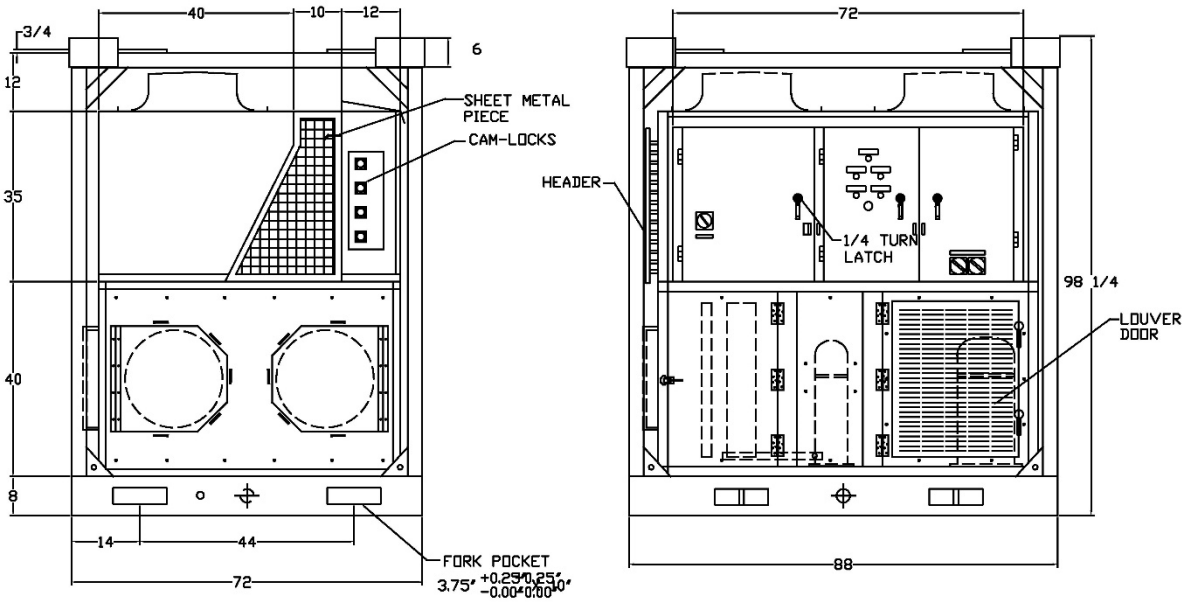

PREPARATION

Physical Specifications

Model Size		SACP 28A-HS
Compressor		
Model (Qty)		CPR27067 (1)
Displacement @60Hz	CMH	45.6
Oil Charge	liters	6.3
Unit Step Capacity Reduction	%	0, 100
Refrigerant		R410A
Air Cooled Condenser		
Coil Rows Deep / Face Area	Sq. ft	2 / 34.2
Fan Diameter (Qty)	mm	800 (2)
Fan Type		Direct Drive Propeller
Fan Hp (Qty) each		2.0 (2)
Fan Motor RPM - 60Hz		994
DX Coil		
Coil Rows Deep / Face Area	Sq. meters	5 / 7.33
Blower Diameter (Qty)	In	14.0 (1)
Blower Type		Direct Drive Plenum Fan
Blower Motor Hp		7.5
Blower Motor RPM - 60Hz		3180
General		
No of Refrigerant Circuits		1
Refrigerant Charge per Circuit	kg / lbs	18.1 / 40
Shipping Weight	kg / lbs	1909 / 4200
Operating Weight	kg / lbs	2100 / 4620

INSTALLATION

Electrical Wiring

Tools and Instruments - One set of wiring tools and electrical tester (Clamp Meter)

⚠CAUTION

- **Confirm that the field-selected electrical components (main power switch, fuses, wires, conduit connections, wire terminals and others) are properly selected according to the Electrical Data in wiring diagram and ensure they comply with national and local codes.**
- **It is recommended that the main power switch be locked at the "OFF" position, to prevent against accidental supply of power during equipment servicing.**
- **Check to ensure that an earthing wire is correctly connected to the unit. This wire protects unit from an electrical shock. Utilization of an earth leakage breaker is recommended.**

Main Power and Control Wiring – Connect the main power wiring and control interlocking wiring according to the wiring diagram label. The power supply should match the unit nameplate in volts, phase and Hertz. All wirings are to be checked for damage and all terminal connections are to be tested for tightness. Unit terminal blocks are to be connected with copper conductors only and sized per ampacity listed on unit data plate.

Duct Connections

1. All ducts shall be made according to local and/ or national codes and also with good duct installation practice. Minimize static losses by limiting the number of bends.

2. Suspended duct work with flexible hangers shall not be fastened directly to the unit.

3. An equivalent length of straight duct shall be installed after the blower outlet. This is to ensure uniform flow of discharge air. If an elbow needs to be installed, then it shall be 1.5 of equivalent duct diameter. (Equivalent duct Ø= $(4ab/\pi)^{0.5}$).

⚠CAUTION

- **Please refer to AMCA standard for proper ducting installation/ guidelines.**

Installation Final Check

Inspect the installation work according to all documents and drawings, Table below shows the minimum check points.

1. Is the unit solidly mounted and levelled? 2. Is the installation location adequate? ○ Space for Ducting ○ Space for Maintenance Work ○ Noise and Vibration ○ Sunshine and Raining ○ Appearance	3. Is electrical wiring system adequate? ○ Wire Size ○ Tightened Connections ○ Switch Size ○ Operation Control Devices ○ Fuse Size ○ Safety Devices ○ Voltage and Hz ○ Interlock 4. Have the L1, L2 and L3 phases of the water chiller correctly been connected to the L1, L2 and L3 phases of the main power source, respectively? 5. Are the stops valves for the condenser liquid line open? 6. Have the packing glands and the cap nuts for the stop valves been tightened?

INSTALLATION

Tools and Instruments – High Pressure Compound Gauge, Low Pressure Compound Gauge, Electrical Tester and general Tools.

⚠CAUTION

- **Switch ON the main power switch, and energize the oil heater (if equipped) for 12 hours before start-up, to sufficiently warm the oil.**
- **Check to ensure that valves are correctly opened. If not opened, serious damage will occur to the compressor due to an abnormally high pressure.**
- **Remove the foreign particles and substances from the water piping perfectly by operating the water pump to circulate the chilled water through the chilled water piping without going through the water coolers, and clean the strainer. Check to ensure that no foreign particle and substance exists in the chilled water piping.**

Test Running

Test running should be accomplished as follows, when the unit is wired according to SMARTech wiring label.

- Switch ON the field-supplied pump and the pump will be started immediately. Check the condition and operation state of these components.
- Fully open the liquid line stop valve.
- Set the operation switch to “ON”, and the compressor will be started in a few minutes after this operation.

⚠CAUTION

- **Scroll compressor works in a fixed rotation. Before compressor start-up, the rotation direction should be checked with a phase sequence indicator. Rotation direction could be changed by interchange two of the three phases connected to the main power wiring terminals of the unit.**
- **Operate the pump for chilled water and other auxiliary equipment such as fan coil units, check to ensure that the chilled water flow is sufficient and other auxiliary equipment operates properly.**
- **Set the controller at the desired temperature.**
- **Check the rotation direction of the condenser fans.**
- **After the system operation becomes stable, check the discharge and suction pressure.**
- **Check to ensure that the control & protective devices are in normal state.**

OPERATION

EQUIPMENT FEATURES

This Air-Cooled Scroll Compressor package is designed for air cooling purpose. Each controller is factory pre-configured for its specified mode of operation; staging scroll compressors on cooling. Mode of control is selectable to be based on supply air (SA) or return air (RA) via the sensor selector switch. In addition, each output stage can be isolated (OFF), under temperature control (LOCAL), manual turn on (HAND) or remote mode on and off by remote thermostat (REMOTE) via a 4 position switch. Protection switches include HP, LP, timer, air flow switch and discharge gas high limit temperature switch (optional). Condenser fan stage in/out via HP switch.

SYSTEM CONTROL/CAPACITY CONTROL

The Smart-Advance SA33 series electronic controller has front plate with 3-digit display and 10 icons, offers a clear readability. Using the 4 push buttons it is possible to activate all the main controller functions.

The front panel of SA33 functions as the user interface and is used to perform all operations relating to SA33.

There are 4 *keys* on the front panel and below are the descriptions of the key functions.

Key	Description of key
Prg / **mute**	**<u>Pressing the button alone</u>** • If pressed for more than 5 seconds, accesses the menu for setting the type P parameters (frequent); • Mutes the audible alarm (buzzer) and deactivates the alarm relay; • When editing the parameters, pressed for 5 second, permanently saves the new values of the parameters; • When setting the time and the on/off times returns to the complete list of parameters. **<u>Pressing together with other buttons</u>** • If pressed for more than 5 seconds together with “Set”, accesses the menu for setting the type C parameters (configuration); • If pressed for more than 5 seconds together with “UP”, resets any alarms with manual reset (the message `rES' indicates the alarms have been reset); any alarm delays are reactivated. **<u>Start up</u>** • If pressed for more than 5 seconds at start up, activates the procedure for loading the default parameter values.
▲	**<u>(UP) Pressing the button alone</u>** • Increases the value of the set point or any other selected parameter **<u>Pressing together with other buttons</u>** • If pressed for more than 5 seconds together with “Prg/mute”, resets any alarms with manual reset (the message `rES' indicates the alarms have been reset); any alarm delays are reactivated.

OPERATION

▼	**(DOWN) Pressing the button alone** • Decreases the value of the set point or any other selected parameter; • In normal operation accesses the display of the second probe and the digital inputs (if enabled).
Set	**Pressing the button alone** • **If pressed for more than 1 second displays and/or sets the set point;** **Pressing together with other buttons** • **If pressed for more than 5 seconds together with "Prg/mute", accesses the menu for setting the type C parameters**

The display shows temperature in range -50 to +150 °C. The temperature is displayed with resolution to the tenths between -19.9 and +59.9 °C. In the event of alarms, the value of probe is displayed alternating with the codes of the active alarms. During programming, it shows the codes and values of the parameters.

Description of LED Icons

Icon	Function	Normal Operation			Start-Up	Notes
		ON	OFF	BLINK		
1	Output 1	Output 1 active	Output 1 not active	Output 1 request		Flashes when activation is delayed or inhibited by protection times, external disabling or other procedures in progress.
2	Output 2	Output 2 active	Output 2 not active	Output 2 request		See note for output 1
3	Output 3	Output 3 active	Output 3 not active	Output 3 request		See note for output 1
4	Output 4	Output 4 active	Output 4 not active	Output 4 request		See note for output 1
⚠	ALARM		No alarm request	Alarm in progress		Flashes when alarms are active during normal operation or when an alarm is active from external digital input, immediate or delayed.
🕓	CLOCK			Clock alarm Operating cycle active	ON if Real Time Clock present	
R	REVERSE	Reverse operation active only ON/OFF outputs	Reverse operation not active			Signal operation of the unit in "reverse" mode, when at least one relay with "reverse" operation is active.
🔧	SERVICE		No malfunction	Malfunction (Contact service)		
TUNING	TUNING		Auto-Tuning function not enabled	AUTO-Tuning function enabled		ON if the Auto-Tuning function is active
D	DIRECT	Direct operation active only ON/OFF outputs	Direct operation not active			Signal operation of the unit in "direct" mode, when at least one relay with "direct" operation is active.

OPERATION

1.1 Displaying the Inputs

Press ▼ : the current input will be displayed, alternating with the value:

b1 : probe 1
b2 : probe 2
di1 : digital input 1
di2 : digital input 2

Press ▲ and ▼ to select the input to be displayed.

Press ***Set*** for 3 seconds to confirm.

If when scanning the inputs a digital input has not been configured, the display will show “nO” (indicating that the digital input does not exist or has been configured), while “opn” and “clo” will be displayed to indicate, respectively, that the input is open or closed. For the probe or, if the probe is not fitted or not configured, the display will show “nO”.

1.2 Setting Chilled Water Temperature Set point (St1)

To change the chilled water temperature setpoint (St1), press ***Set***. The display shows St1 and the current value of St1.

Press ▲ and ▼ to reach the desired value.

Press ***Set*** to confirm the new value of St1.

Press ***Set*** again and the display returns to the standard view.

1.3 Setting Chilled Water Temperature Differential Set point (P1)

To change the chilled water temperature differential set point (P1), press ***Prg*** mute and hold for more than 5 seconds.

The display is now showing “P1” and blinking.

Press ***Set*** once and current value of the setting is displayed.

Press ▲ and ▼ to reach the desired value.

Press ***Set*** to confirm the new value of P1.

Press ***Prg*** mute and hold for more than 5 seconds to saves the new setting permanently and return to standard view.

1.4 Acknowledge Alarm and Alarms with Manual reset

When an alarm occurred, the alarm buzzer and relay are on. The display shows alarm code alternating with the standard display.

Press Prg/mute to mutes the audible alarm (buzzer) and deactivates the alarm relay.

To reset alarms with manual reset, press Prg/mute and ▲ together for more than 5 seconds. When message “rES” is shown, this indicates that the alarms have been reset.

Table of Alarms

Message on Display	Cause of the Alarm	Icon on Display	Buzzer	Reset
E01	Probe B1 fault	flashing	OFF	Automatic
E02	Probe B2 fault	flashing	OFF	Automatic
E03	Digital contact open (immediate alarm, delayed alarm or immediate alarm with manual reset)	flashing	ON	Automatic
E04	High temperature alarm	flashing	ON	Automatic
E05	Low temperature alarm	flashing	ON	Automatic
E06	Real Time Clock fault	flashing	OFF	Automatic/manual
E07	EEPROM error, unit parameters	flashing	OFF	Automatic
E08	EEPROM error, operating parameters	flashing	OFF	Automatic
E09	Acquisition error. Reached max. time in calculation of PID parameters	flashing	OFF	Manual
E10	Calculation error. PID gain null	flashing	OFF	Manual
E11	Calculation error. PID gain negative	flashing	OFF	Manual
E12	Calculation error. Integral & derive. Time negative	flashing	OFF	Manual
E13	Acquisition error. Reached max. continuous time in calculation of gain.	flashing	OFF	Manual
E14	Error when starting. Situation not suitable.	flashing	OFF	Manual

OPERATION

Factory Set SA33 Settings:

Par.	Description	Setting	UOM	Remarks
St1	Set point 1	70	ºF	Based on RA sensing (DI1 open)
St2	Set point 2	55	ºF	Based on SA sensing (DI1 closed)
c0	Operating mode	7	-	7=direct, 8=reverse
P1	Set point differential 1	3	ºF	
P2	Set point differential 2	3	ºF	
c5	Type of control	0	-	On/off (proportional)
c6	Delay btw diff. relay activation	5	sec	
c7	Min time btw same relay activation	5	min	
d1	Min time btw diff. relay deactivation	0	sec	
c8	Min relay output off time	3	min	
c9	Min relay output on time	0	min	
c10	Control output with probe alarm	0	-	All outputs off
c11	Output rotation	1	-	Std rotation
c13	Probe type	0	-	NTC
c18	Temp unit of measure	1	ºF	
c19	Operation of probe 2	0	-	disabled
c21	Set point 1 min value	-50	ºF	
c22	Set point 1 max value	140	ºF	
c23	Set point 2 min value	-50	ºF	
c24	Set point 2 max value	140	ºF	
c29	Digital input 1	0	-	Change no effect
c33	Special operation	0	-	Disabled
c56	Delay at start-up	60	Sec	

OPERATION

VARIABLE FREQUENCY DRIVE (VFD)

This package unit is fitted with an inverter (VFD) to vary the blower speed. Blower speed can be adjusted via the front panel mounted potentiometer. Listed below is a quick reference for factory adjusted VFD settings. VFD Instruction Manual is enclosed and to be read in conjunction with this manual as necessary.

VFD27018 Drives Parameters:

PAR	DESCRIPTION	SET	DEFINE
1001	EXT1 COMMANDS	1	DI1
1002	EXT2 COMMANDS	0	NOT SEL
1003	DIRECTION	1	FIXED TO FORWARD
1101	KEYPAD REF SEL	1	REF 1 (HZ)
1102	EXT1/EXT2 SEL	0	EXT1 ACTIVE
1103	REF1 SELECT	1	AI 1
1104	REF1 MIN	30.0Hz	
1105	REF1 MAX	60.0Hz	***mtr amp must not exceed rated amp**
1301	MINIMUM AI1	5.0%	5% (0.5V)
1302	MAXIMUM AI1	100.0%	100% (10V)
1303	FILTER AI1	0.1s	
1401	RELAY OUTPUT 1	4	FAULT
1404	RO 1 ON DELAY	0.3s	
1405	RO 1 OFF DELAY	0.0s	
1601	RUN ENABLE	1	DI1
1602	PARAMETER LOCK	1	OPEN, not locked.
1604	FAULT RESET	0	KEYPAD
1606	LOCAL LOCK	1	IF DI1 ACTIVE, LOCAL CONTROL DISABLED
2003	MAX CURRENT	9A	
2007	MINIMUM FREQ	20.0Hz	
2008	MAXIMUM FREQ	70.0Hz	
2101	STRT FUNCTION	6	SCAN START
2102	STOP FUNCTION	1	COAST
2113	START DELAY	0.00s	
2202	ACCELER TIME 1	5.0S	
2203	DECELER TIME 1	5.0S	
9902	APPLIC MACRO	1	ABB STANDARD
9905	MOTOR NOM VOLT	460V	
9906	MOTOR NOM CURR	8.7A	
9907	MOTOR NOM FREQ	60.0HZ	
9908	MOTOR NOM SPEED	1510rpm	
9909	MOTOR NOM POWER	5.5kW	

OPERATION

Operator panel Operation procedure

STEP 1: Confirm that circuit breaker (7CB) is switched ON and CONTROL POWER pilot light (1PL) is lit.

- If not, check phase monitor relay (PMR) and emergency stop (ES) button.
- If INCORRECT POWER pilot light (2PL) is lit, check PMR for phase rotation and voltage setting.

STEP 2: Turn AIR FLOW switch (1SW) to require blower operating mode.

- VFD RUNNING pilot light (3PL) lit if blower is started using VFD.
- BYPASS RUNNING pilot light (5PL) lit if blower is started using bypass starter.
- Check blower circuit breaker overload (4OL) or VFD status if BLOWER TRIP pilot light (4PL) is lit.

STEP 3: Set blower running speed using SPD ADJ POT (potentiometer)

STEP 4: Cooling probe selection switch (3SW)

- Turn 3SW to RA - Cooling is based on return air control.
- Turn 3SW to SA - Cooling is based on supply air control.

STEP 5: Turn ON COOLING switch (5SW)

STEP 6: Turn OFF/LOCAL/HAND/REMOTE switch (2SW) to require compressor operating mode.

- OFF - Compressor is switched off.
- LOCAL - Compressor is operating with local controller.
- HAND - Compressor is operating in manual mode without the controller (manual on).
- REMOTE - Compressor is operating in remote mode without the controller (on/off by remote thermostat)

It is the customer's responsibility to always follow the written operating instructions of the unit and maintain safe work practices.

MAINTENANCE

These units are designed to provide years of services with minimum maintenance. Nonetheless, it is a good practice to carry out regular inspection and checking to ensure the unit's optimum performance. The following schedule shall mean only to be a guide. Actual maintenance schedule for each installation shall depend upon the duty usage, the cleanliness of the surrounding environment, and the cleanliness of the spaced to be air-conditioned.

ITEM	MAINTENANCE PROCEDURE	RECOMMENDED SCHEDULE
Air Filters	1. Washable type. 2. Clean with a vacuum cleaner or tapped lightly and then wash in luke warm water (below 104°F [40°C]). 3. Make sure the filter is dry.	Once a month or depending upon the condition of the circulated air.
Blower	1. Turn the blower manually. It should run smoothly and there is no excessive bearing noise.	Once every six months.
Bearing and Shaft	1. Check for evidence of wear.	Once a year.
Bolts, Screws and Nuts.	1. Tighten any loose components.	Once a year.
Coil	1. Check and remove clogged item between fins.	Once a year.
Paint	1. Check any evidence of corrosion.	Once a year.
Compressor	1. Check if there is any leakage.	Every six months.
Electrical	1. Check voltage, current and wiring. 2. Check connections.	Every two months.
Drain Pan and Pipe	1. Pour some water into the drain pan and let the water run through. If the pipe is clogged, remove the dirt.	Every six months.

MAINTENANCE

Leak Test (System Pressure Test)

1. Leak test pressure is at 200 psig [1380kPa]. Disconnect or shut off all devices which may be damaged by 200 psig [1380 kPa] test pressure.
2. Open all valves in system so that entire system can be pressurized and connect refrigerant cylinder to charging connection.
3. Charge in freon vapor to the system until 50 psig [345 kPa] and then pressurize with dry nitrogen until 200 psig [1380 kPa]. Stop charging gas if noise of escaping gas is heard. Skip to sequence (6.)

⚠CAUTION

Always use inert gas such as nitrogen for testing. Never use other gases such as Oxygen or acetylene which may be inflammable.

4. With pressure at 200 psig [1380kPa], shut off the valve connecting nitrogen cylinder to the system. Disconnect nitrogen cylinder and leave pressure gauge indicating 200 psig [1380kPa] connected to system.
5. With halide torch or electronic leak detector, leak checks every valve, joint, pressure control, coils and headers. Mark every leak and record down as remarks.
6. When all leaks have been found, blow off charge through tube to outside to prevent refrigerant accumulation around the system.
7. Repair all leaks (check off on your remarks): If re-brazing is required, feed nitrogen through into the system at slightly excessive pressure (leave system open and make sure nitrogen flows through).
8. After repairing leaks, re-check as per procedure 1 through 7.
9. When system tight after leak test, keep pressurized at 200 psig [1380kPa] and hold for 12 hours. Full in pressure should be negligible (some may be due to temperature change only.)
10. Wrap all joints smartly with piece of wood or plastic hammer and leak check again.
11. When system is tight, proceed with vacuum test and dehydration.

Vacuum Test and Dehydration

The purpose of evacuation is to evacuate the system when it is known or suspected that the system has been exposed to atmosphere, and there is a possibility that moisture has entered the system.

1. Blow-off charge or pump down the R-410A.
2. Connect vacuum pump the liquid line valve and carefully check the unit piping to ensure all passages are open. (NEVER USE SYSTEM COMPRESSOR TO EVACUATE).
3. Start vacuum pump operation and pull vacuum to about 2 to 2.5 mm Hg [0.26 to 0.33 kPa] absolute pressure. During evacuation the pressure may remain steady for sometime at about 0.5 inch or 12 mm Hg [1.69 kPa] absolute pressure. This is caused by moisture evaporating in the system. This "boiling off" or "evaporation period" last about the same period of time as it took from initial start to reach this point.
4. When the "boiling off" period lasts longer that indicated under 3, break vacuum with R-410A or nitrogen gas to sweep moisture out and evacuate and dryer shells, etc., up to a temperature of 100°F [37.8°C].
5. Break vacuum with R-410A or nitrogen gas until pressure is 0 psig [0 kPa].
6. Re-evacuate to 1 mm Hg [0.133kPa] absolute pressure.
7. Disconnect vacuum pump and leave system standing for 6 hours. There should be no change in vacuum during this period. Repeat 1 to 7 if there is a change,

Replacement of Driers or Sight Glass

1. Break vacuum with nitrogen.
2. When permanently brazed drier or sight glass is used, open one valve on system to atmosphere while maintaining slight nitrogen flow.
3. When flare connected drier or sight glass is used, use similar procedure as under 2. However, no valve need to be left open to atmosphere.
4. When replaceable dryer core is used follow procedure as under 3. Insert drier core(s). Tighten cap screws.
5. Re-evacuate system to 1 mm Hg [0.133 kPa] absolute.

MAINTENANCE

Charging

1. Connect refrigerant cylinder through charging connection to charging valve.
2. Loosen flare nut on other end of charging connection and blow air out with refrigerant. Tighten flare nut on charging connection.
3. Weight refrigerant cylinder.
4. Open charging valve and charge in refrigerant vapor through suction access valve until about 150 psig [1034 kPa]. Switch to liquid line access valve and charge in liquid refrigerant. Continue charging with liquid refrigerant until clear glass is observed.
5. Shut off refrigerant charging valve but keep connected. Check charging valve flare nut for leak. Check and record down discharge and suction pressure. If more than one system has to be charged, follow procedure 1 through 4 for each system. After all the systems have been done up to step 4, proceed with 5 and 6.
6. Shut off the system (compressor, fans, pumps) and leave for 24 hours.

Lubrication

The compressors are charged at the factory with the correct type and amount of oil. It is not necessary to add oil, if the refrigerant cycle remains sealed. Check oil level frequently to see that a sufficient amount of oil remains in the crankcase. Compressor oil level can be checked by the sight glass. To make sure that proper oil level is observe, operate the compressor for 15 minutes, then stop the compressor. Oil should appear from 1/2 to 3/4 in the sight glass with the compressor stopped. If the oil becomes discolored indicating contamination, the contamination can removed by installing a new filter-drier in the liquid line and replacing the oil.

⚠WARNING

- **Use only SMARTech approved refrigeration oil. Failure to comply may void warranty!**

Refrigerant Piping – [SACP 28A-HS] Part 1

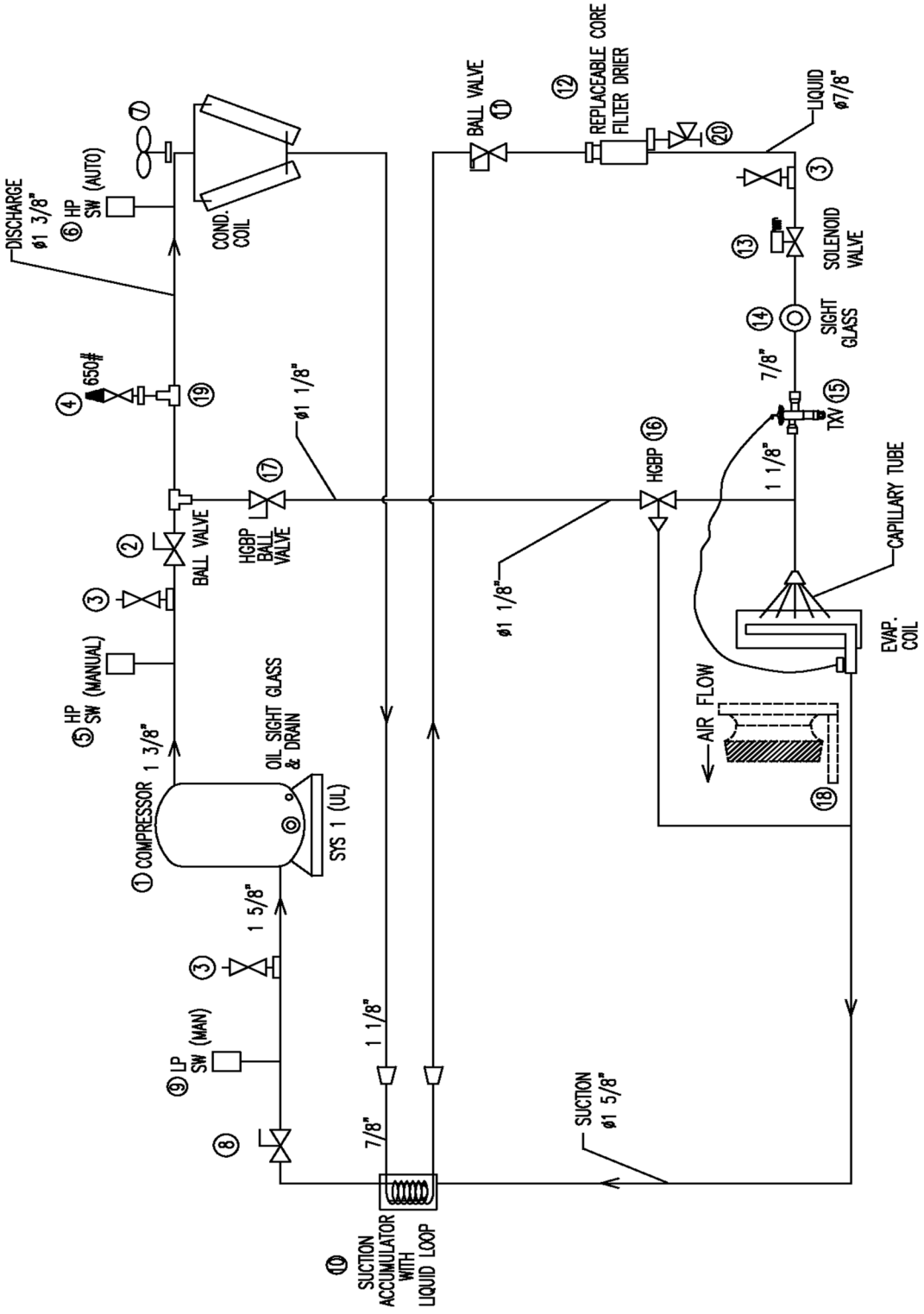

Wiring Diagram – [SACP 28A-HS]

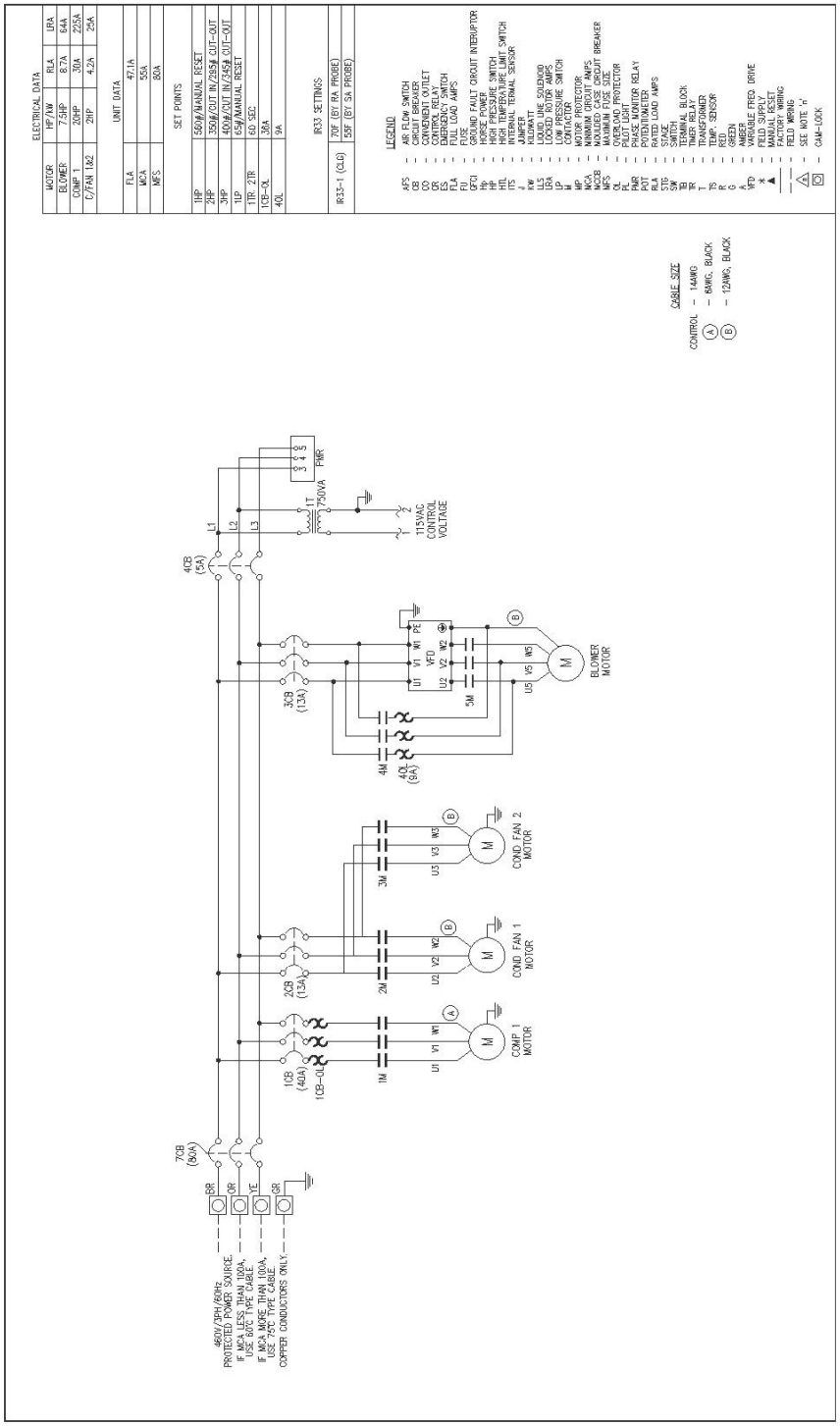

Wiring Diagram – [SACP 28A-HS]

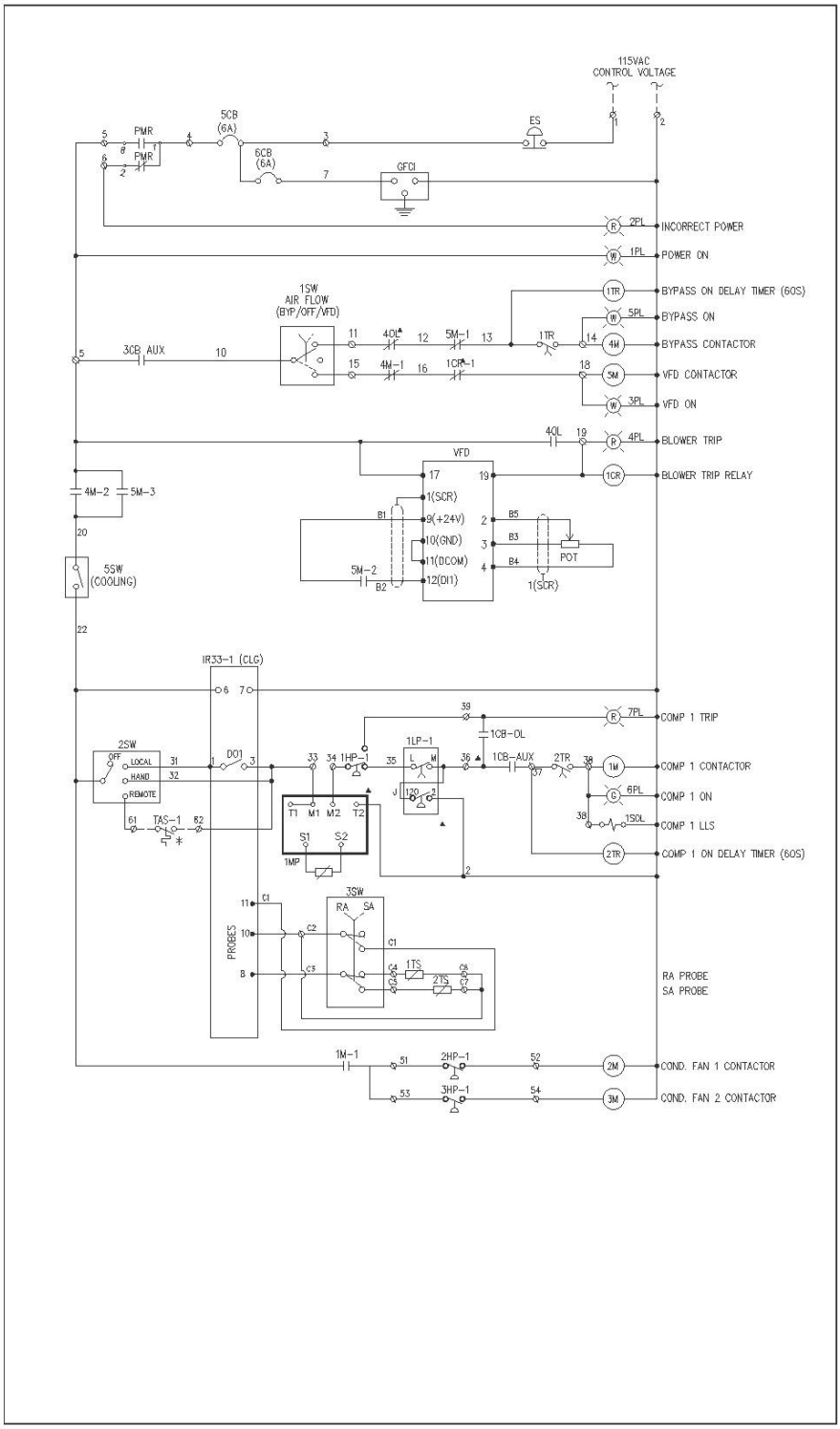

Control Panel Layout – [SACP 28A-HS]

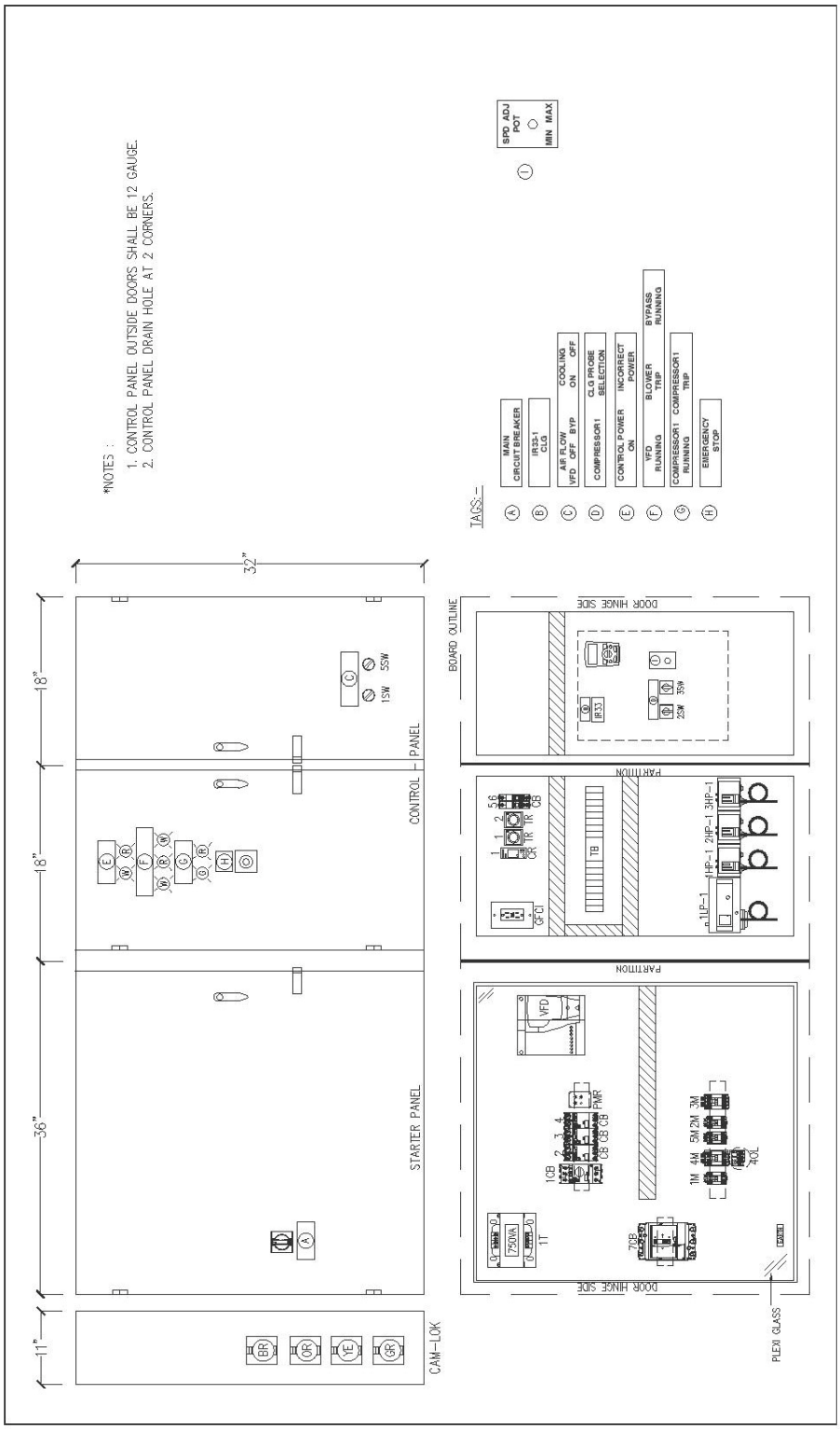

Sample Log Sheet

AIR COOLED PACKAGE UNIT

NAMEPLATE DATA:

UNIT MODEL NO.:..... **UNIT NO**.:..... **VOLTS:**..... **Hz** .....

UNIT SERIAL NO.: .....

JOB NAME:..... **COMPRESSOR MODEL:** .....

START DATE: .....

DATE									
TIME									
ELAPSED TIME METERS									
COMP. NO.									
SUCTION PRESSURE	1.								
	2.								
	3.								
	4.								
SUCTION TEMPERATURE	1.								
	2.								
	3.								
	4.								
DISCHARGE PRESSURE	1.								
	2.								
	3.								
	4.								
DISCHARGE TEMPERATURE	1.								
	2.								
	3.								
	4.								
DISCHARGE SUPERHEAT (DISC. TEMP.-SAT. DISCH.)	1.								
	2.								
	3.								
	4.								
SUCTION SUPERHEAT (SAT. SUCT .- SUC. TEMP)	1.								
	2.								
	3.								
	4.								
RETURN AIR TEMPERATURE – DB/WB									
SUPPLY AIR TEMPERATURE – DB/WB									
AIR VOLUME									
AMBIENT AIR TEMPERATURE									
OFF CONDENSER AIR TEMPERATURE									
COMPRESSOR AMPS	1.								
	2.								
	3.								
	4.								
EVAPORATOR BLOWER AMPS									
CONDENSER FAN AMPS									
VOLTS									

NOTE: *THIS LOG SHEET IS PROVIDED AS A RECOMMENDATION OF THE READINGS THAT SHOULD BE TAKEN ON A PERIODIC BASIS. THE ACTUAL READINGS TAKEN AND THE FREQUENCY WILL DEPEND UPON THE UNITS APPLICATION, HOURS OF USE, ETC. THIS TYPE OF INFORMATION CAN PROVE VERY USEFUL IN PREVENTING AND/ OR SOLVING PROBLEMS THAT MIGHT OCCUR DURING THE LIFE OF THE UNIT.*

Troubleshooting Table

SYMPTOM	POSSIBLE CAUSE	REMEDY
1. Unit will not start	1. Power off 2. Main line open 3. Incorrect wiring 4. Loose terminals 5. Control circuit open	1. Check main disconnect switch. 2. Check main fuses. 3. Check with wiring diagrams. 4. Tighten terminals. 5. Check pump fuses, starter heater elements, pressure and temperature controls.
2. Compressor hums but does not start	1. Low voltage 2. No power on one phase of 3 phase unit 3. Faulty starter or contactor	1. Check at main entrance and at unit. Consult power company if voltage is low and increase wire size to the unit if voltage is normal at main and low at unit. Voltage must be within 10% of motor nameplate rating. 2. Check fuses and wiring. 3. Check the contacts.
3. Compressor cycles on low pressure control	1. Refrigerant shortage 2. No load on chiller 3. Restriction in liquid line	1. Check for leaks and add refrigerant. 2. Check pump operation and water flow. 3. a.)Plugged drier. If temperature drop exists across the drier remove and replace cores. b.) Liquid line or suction valve partially closed. Open valves fully and close in one full turn. c.) Expansion valve clogged or inoperative. Check superheat setting. Check charge and thermo bulb.
4. Compressor cycles on high pressure control	1. Compressor discharge valve partially closed. 2. Overcharge of refrigerant 3. High pressure control improperly set 4. Condenser fan inoperative 5. Dirty condenser 6. Fan cycle switches in-operative, or set too high 7. Fan motors not running 8. Fan motor reverse rotation	1. Open valve fully and close with one turn 2. Purge system while in operation until bubbles show in sight glass. Close valve and add small amount of refrigerant until sight glass just clears. 3. Adjust the control. 4. Check, replace or repair set screw (pulley), fan motor, or inoperative fan control. 5. Clean condenser surfaces with brush and/or vacuum. 6. Check and readjust. 7. Check contactor, thermal overload relay, check motor, check capacitor. (If single phase) 8. Reverse two fan motor leads. (3 phase only)